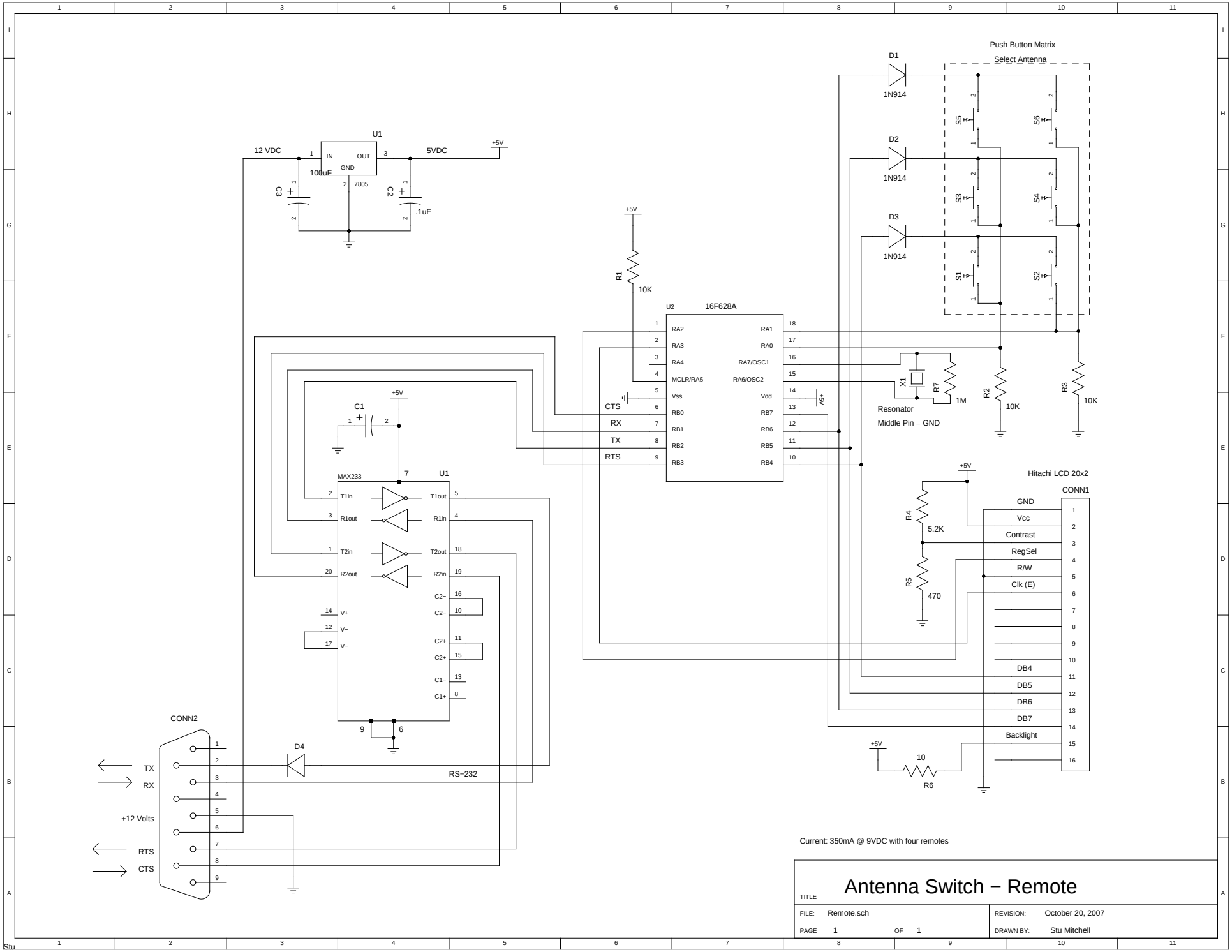
Push Button Matrix
Select Antenna
D1
1N914
D2
1N914
D3
1N914
S1
S2
S3
S4
S5
S6
U1
12 VDC
IN
OUT
GND
7805
5VDC
+5V
C3
100uF
C2
.1uF
R1
10K
U2
16F628A
RA2
RA3
RA4
MCLR/RA5
Vss
RB0
RB1
RB2
RB3
RA1
RA0
RA7/OSC1
RA6/OSC2
Vdd
RB7
RB6
RB5
RB4
CTS
RX
TX
RTS
X1
R7
1M
R2
10K
R3
10K
Resonator
Middle Pin = GND
C1
MAX233
U1
T1in
R1out
T2in
R2out
T1out
R1in
T2out
R2in
C2−
C2+
C1−
C1+
V+
V−
R4
5.2K
R5
470
Hitachi LCD 20x2
CONN1
GND
Vcc
Contrast
RegSel
R/W
Clk (E)
DB4
DB5
DB6
DB7
Backlight
R6
10
CONN2
TX
RX
+12 Volts
RTS
CTS
D4
RS−232
Current: 350mA @ 9VDC with four remotes
TITLE
Antenna Switch − Remote
FILE: Remote.sch
PAGE 1 OF 1
REVISION: October 20, 2007
DRAWN BY: Stu Mitchell
Stu