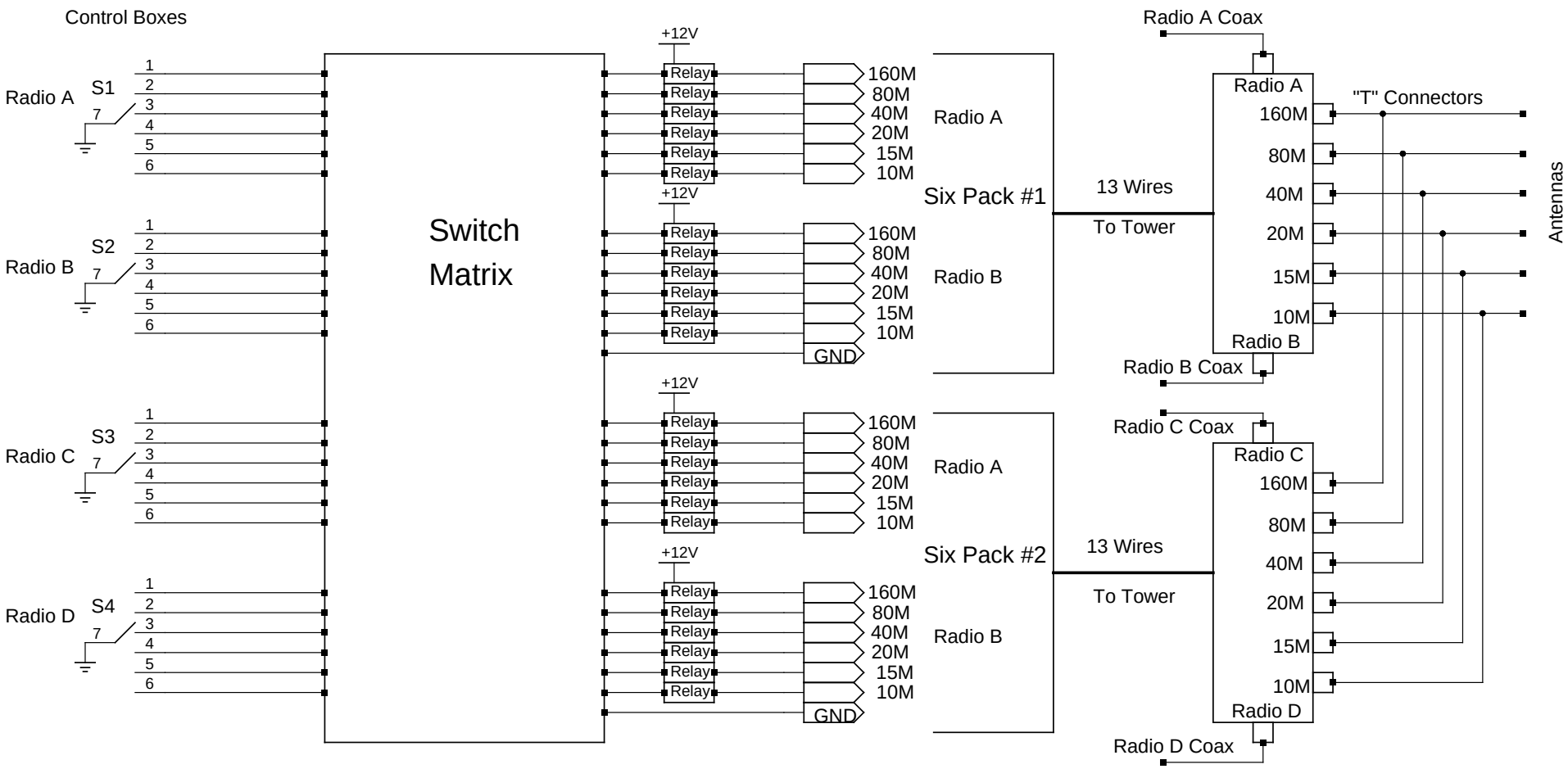
Control Boxes
Radio A
S1
Radio B
S2
Radio C
S3
Radio D
S4
1
2
3
4
5
6
7
Switch Matrix
+12V
Relay
160M
80M
40M
20M
15M
10M
GND
Six Pack #1
Six Pack #2
Radio A
Radio B
13 Wires
To Tower
Radio A Coax
Radio B Coax
Radio C Coax
Radio D Coax
Radio C
Radio D
"T" Connectors
Antennas